50 cm diameter dome
Cut and fold 10

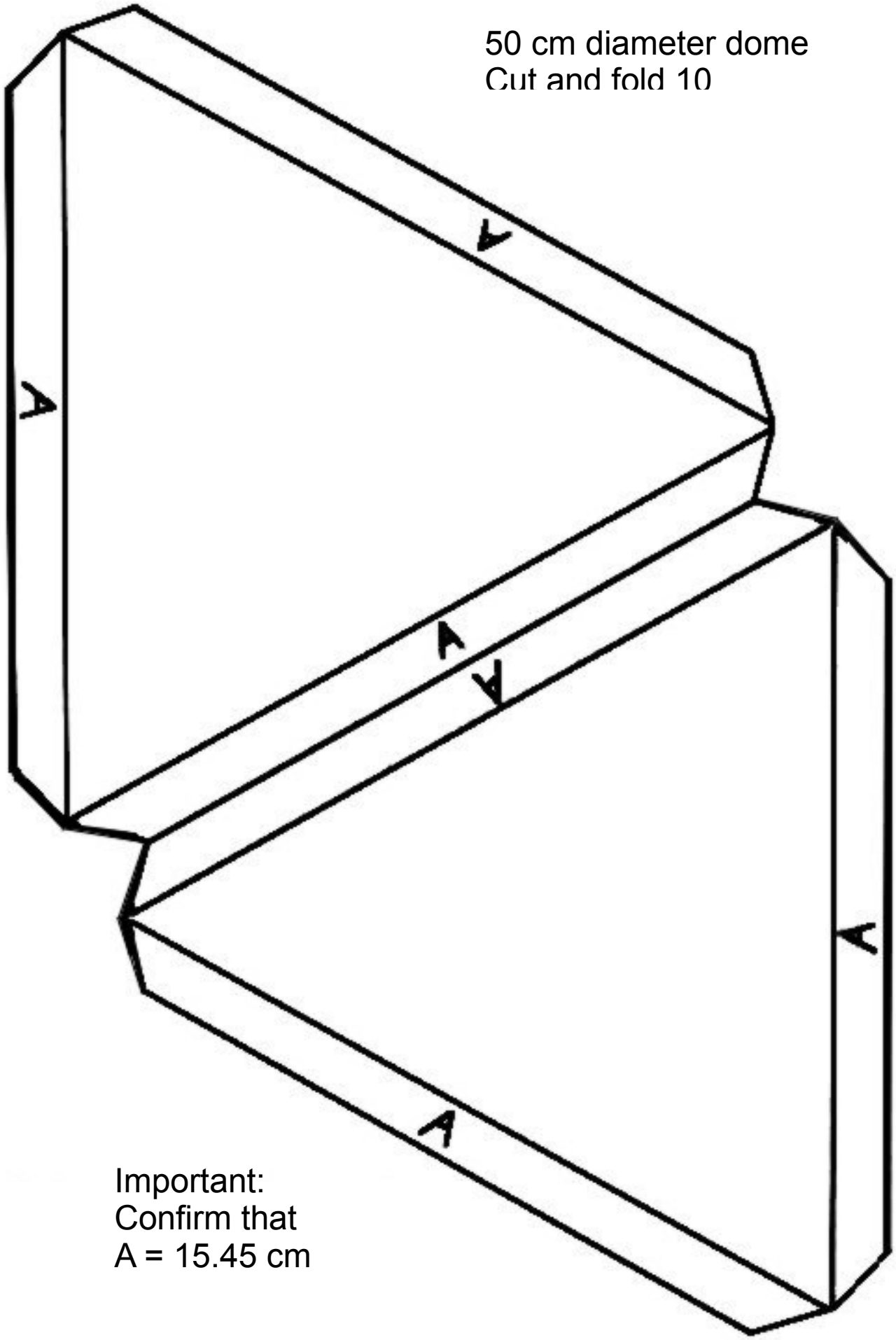

Important:
Confirm that
A = 15.45 cm